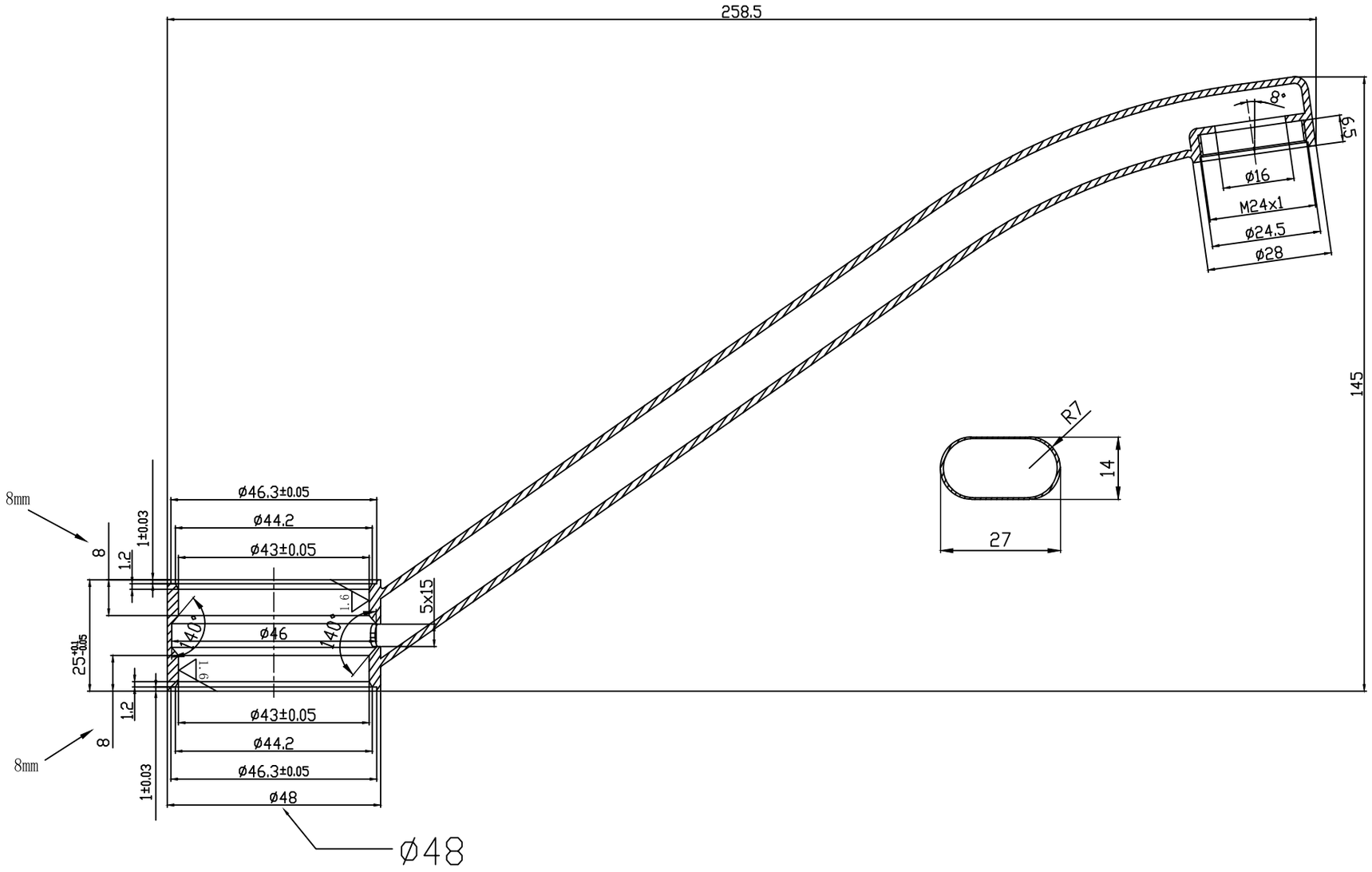
258.5
145
8°
6.3
ø16
M24x1
ø24.5
ø28
R7
14
27
8mm
8
1.2
1±0.03
ø46.3±0.05
ø44.2
ø43±0.05
5x15
1.6
140°
ø46
25+0.1 -0.05
1.6
ø43±0.05
ø44.2
ø46.3±0.05
ø48
8mm
8
1.2
1±0.03
ø48